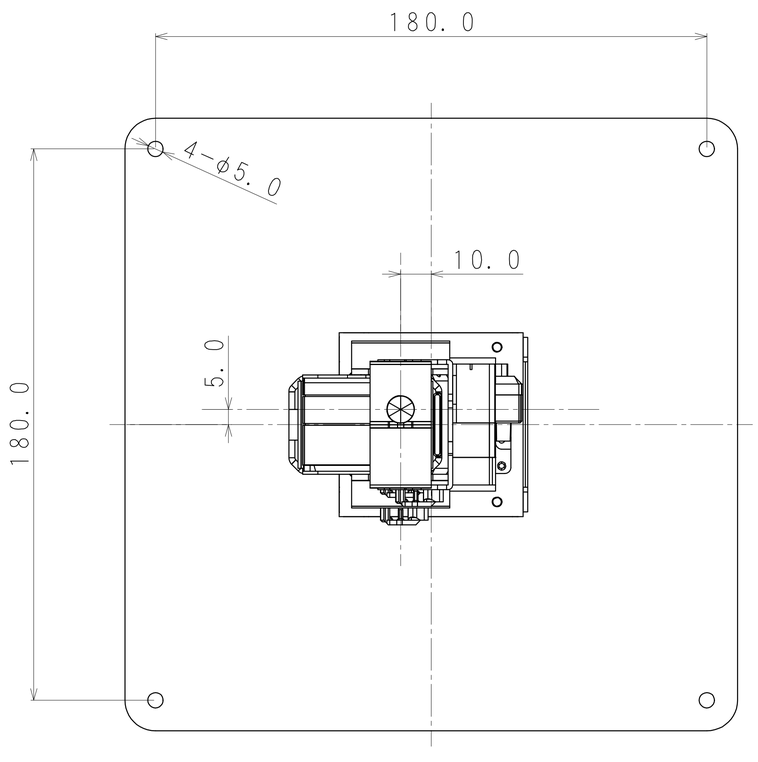
180.0
4−φ5.0
10.0
5.0
180.0

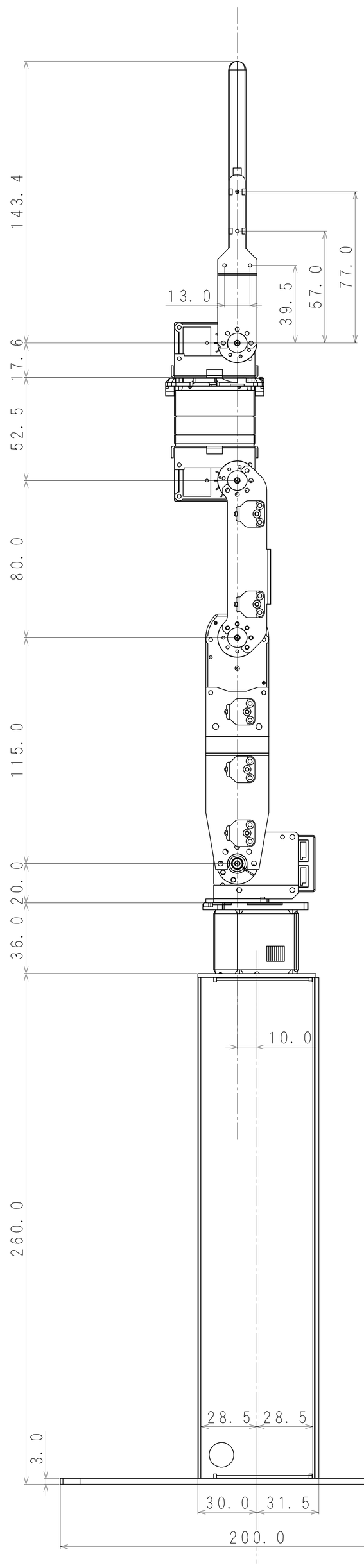
143.4
13.0
39.5
57.0
77.0
17.6
52.5
80.0
115.0
20.0
36.0
10.0
260.0
28.5
28.5
3.0
30.0
31.5
200.0

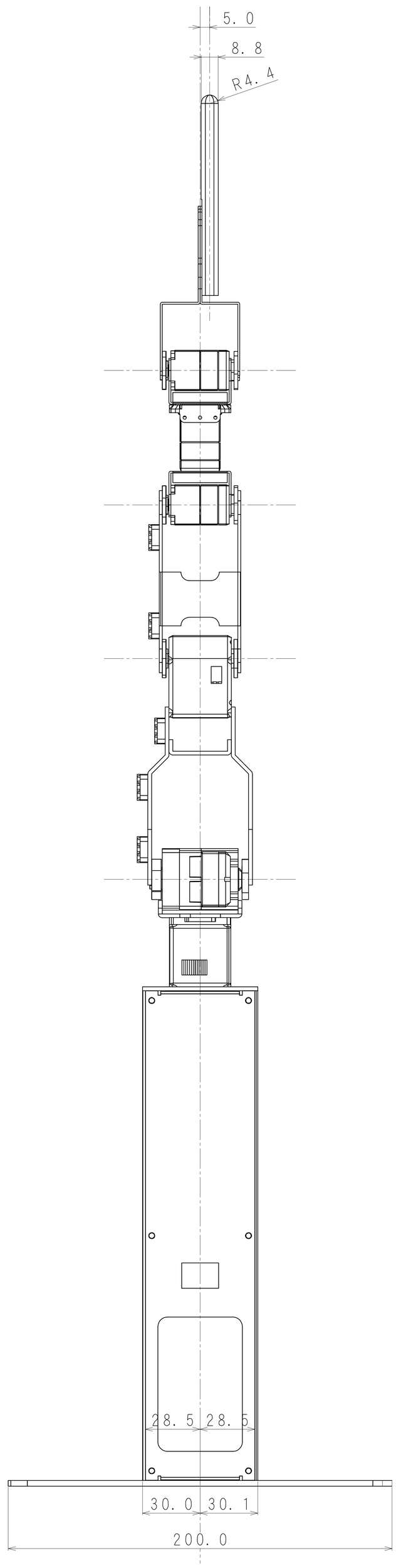
5.0
8.8
R4.4
28.5
28.5
30.0
30.1
200.0